REVISIONS				
ZONE	REV.	DESCRIPTION	DATE	APPROVED
	1	Customer Information	1/1/2014	WRH

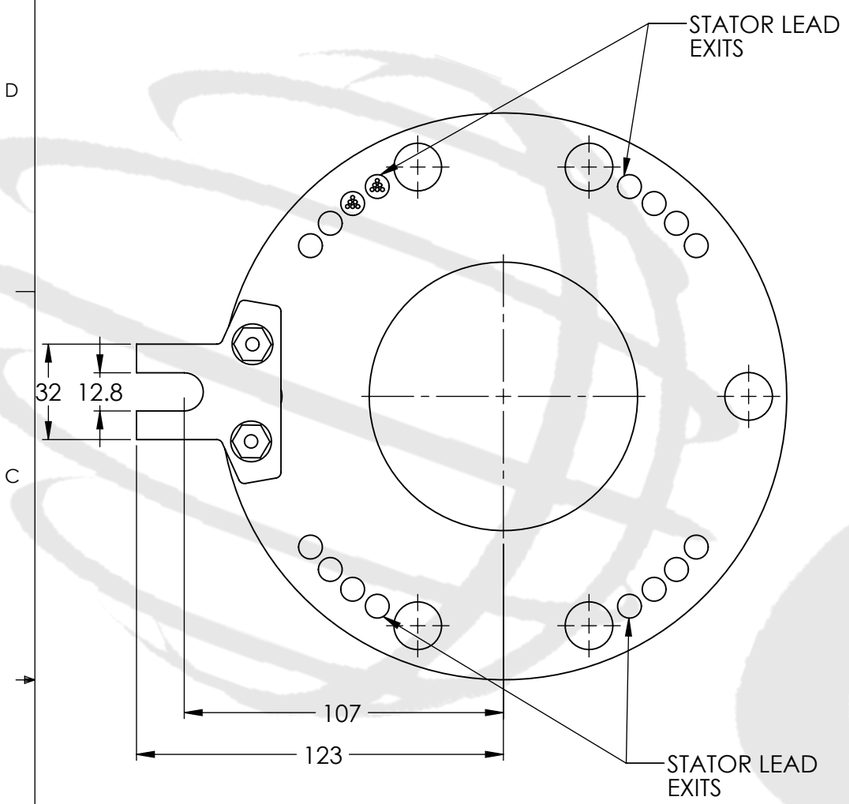

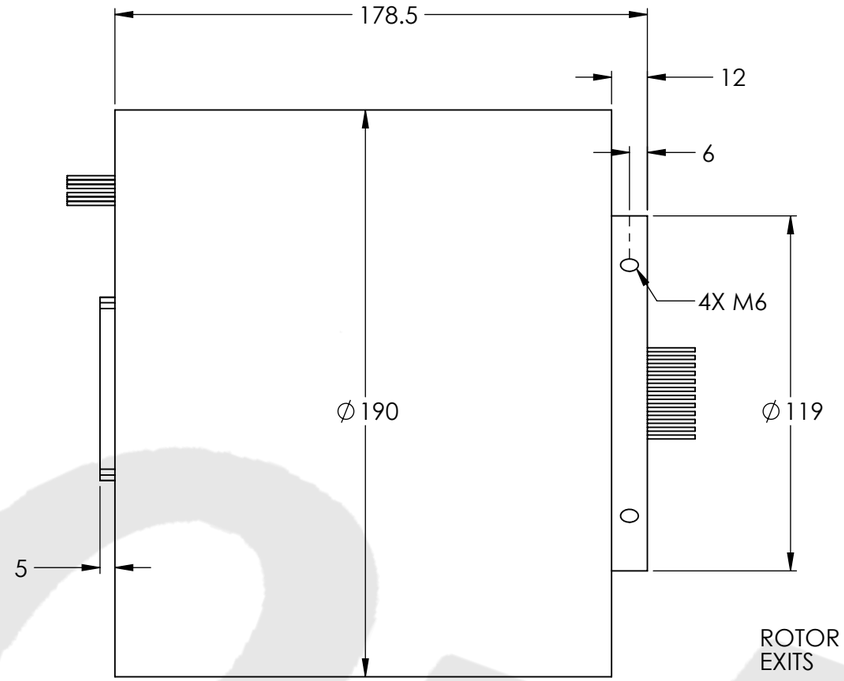

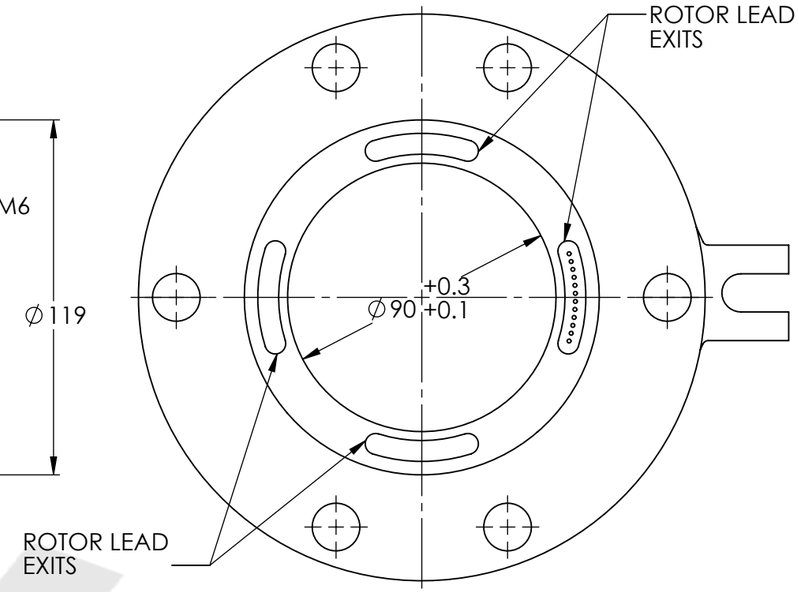

ROTOR AND STATOR LEADS FOR VISUALIZATION ONLY. TRUE NUMBERS, ORIENTATION, SIZE, LOCATION, AND COLORS CAN VARY BASED ON SPECIFICATIONS. ROTOR AND STATOR EXIT POINTS NOTED.

TECHNICAL DATA	
NUMBER OF CIRCUITS	24 POWER CIRCUITS
RATED VOLTAGE	380 VAC (POWER) 240 VAC/VDC (SIGNAL)
DIELECTRIC STRENGTH	500VAC@50Hz,60s
RATED CURRENT	2A/RING (SIGNAL), 10A, 15A, OR 20A/RING (POWER)
NOMINAL SPEED	0-500 RPM
INSULATION RESISTANCE	≥1000 MΩ/500VDC (SIGNAL), ≥500 MΩ/500VDC (POWER)
DYNAMIC CONTACT RESISTANCE	<10 mΩ
CONTACT MATERIAL SURFACE	PRECIOUS METALS
LEAD	22 AWG SILVER PLATED AND 16 AWG TINNED, COLOR CODED, PTFE INSULATED LEAD WIRES
STANDARD LEAD LENGTH	500mm
TEMPERATURE	-20°C to + 80°C
BEARINGS	MINIATURE, PRECISION STEEL BEARINGS
HOUSING	ABS PLASTIC
PROTECTION	IP51

WIRE COLOR CODE	
16 AWG (24 POWER CIRCUITS)	
1/13. RED	2/14. YELLOW
3/15. BLACK	4/16. BLUE
5/17. GREEN	6/18. WHITE
7/19. PURPLE	8/20. GRAY
9/21. BROWN	10/22. ORANGE
11/23. DARK BLUE	12/24. KHAKI

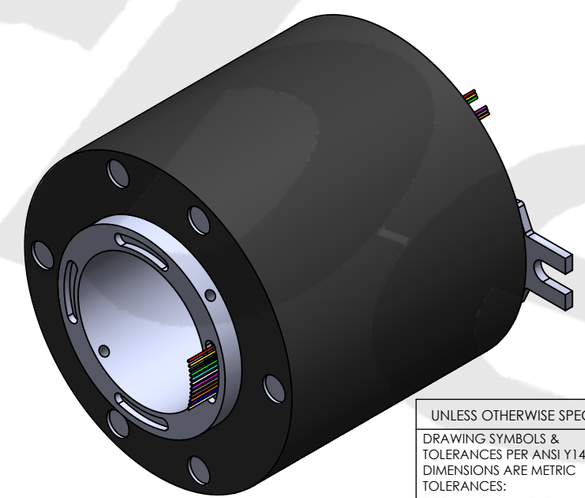

THIS DRAWING CONTAINS PROPRIETARY INFORMATION OF THE ORBEX GROUP AND MAY NOT BE IN WHOLE OR IN PART DUPLICATED OR DISCLOSED OR USED FOR MANUFACTURE OF ANY PART DISCLOSED HEREIN WITHOUT WRITTEN PERMISSION OF THE ORBEX GROUP.
CONFIDENTIAL

UNLESS OTHERWISE SPECIFIED:
DRAWING SYMBOLS & TOLERANCES PER ANSI Y14.5
DIMENSIONS ARE METRIC
TOLERANCES:

DECIMALS	LINEAR	ANGULAR
.X	±0.2	±0.5DEG
.XX	±0.02	±0.2DEG
.XXX	±0.005	±0.01DEG

INTERPRET GEOMETRIC TOLERANCING PER: ANSI Y14.5

MATERIAL: SEE CHART
FINISH: CLEAN
DRAWN: MRJ 1/7/2014

Orbex Group

TITLE: Slip Ring

SIZE: B
PRT. NO.: 590-0024
REV: CI
SCALE: 1:2
SHEET 1 OF 1